KATO

CITYRANGE SUPERBOOM

CR-130Ri

ROUGH TERRAIN CRANE

PREMIUM Roughter

【SPECIFICATION】

■CRANE

Description		Rough terrain crane with maximum lifting capacity 13 ton
●Crane specification		
Maximum rated lifting capacity	5.3 m Boom	13,000kg × 1.7 m (Parts of line : 8)
	9.04 m Boom	6,000kg × 4.0 m (Parts of line : 4)
	12.78 m Boom	6,000kg × 4.0 m (Parts of line : 4)
	16.52 m Boom	5,000kg × 4.5 m (Parts of line : 4)
	20.26 m Boom	4,700kg × 4.0 m (Parts of line : 4)
	24.0 m Boom	3,200kg × 5.5 m (Parts of line : 4)
	3.6 m Jib	1,600kg × 75° (Parts of line : 1)
	5.5 m Jib	1,000kg × 70° (Parts of line : 1)
	Rooster	1,800kg (Parts of line : 1)
Boom length		5.3m — 24.0m
Jib length		3.6m — 5.5m
Maximum rated lifting height		24.8m (Boom)
		30.3m (Jib)
Hoisting line speed (winch up)	Main winch	115m / min (at 5th layer)
	Auxiliary winch	102m / min (at 3rd layer)
Hoisting hook speed (winch up)	Main winch	(Parts of line : 8) 14.37m / min (at 5th layer)
	Auxiliary winch	(Parts of line : 1) 102.00m / min (at 3rd layer)
High-speed lowering Rope speed	Main winch	157m / min (at 3rd layer)
	Auxiliary winch	157m / min (at 3rd layer)
Boom derricking angle		-7.5° — 82°
Boom derricking time		30s / -7.5° — 82°
Boom extending speed		18.7m / 65s
Slewing speed		2.4min^{-1}
Tail slewing radius		1,600mm
●Equipment and structure		
Boom type		Round-shaped, 6-section hydraulically telescopic type (the 2nd and 3rd boom sections at the same time, the 4th, 5th and 6th boom sections at the same time)
Jib type		2 sections (2nd section of draw-out type) Hydraulic stepless tilting type (offset angles 5° — 60°)
Boom extension/ retraction equipment		Two hydraulic cylinders and wire ropes used together
Boom derricking/lowering equipment		One hydraulic cylinder of direct acting type with pressure-compensated flow control valve
Jib derricking/lowering equipment		Hydraulic cylinder
Winch system Main & Auxiliary winches		Two units of Single winch, Planetary gear reduction type (built-in negative brake) with Automatic brake, High/Low speed switching system and Hydraulic compensated flow control valve.
Slewing equipment		Equipped with Hydraulic motor drive and a planetary gear speed reducer (built-in negative brake), Free / Lock change-over type
Slewing bearing		Ball bearing type
Outriggers	Type	Hydraulic H-beam type (with float and vertical cylinder in single unit)
	Extension width	4,750mm (Fully extended)
		4,300mm (Intermediately extended)
		3,700mm (Intermediately extended)
		2,700mm (Intermediately extended)
		1,640mm (Completely retracted)
Wire rope for hoisting	Main winch	Diameter: 11.2mm × Length: 132m
	Auxiliary winch	Diameter: 11.2mm × Length: 65m
●Hydraulic equipment		
Oil pump		4 pumps, plunger and gear type
Hydraulic motor	Hoisting motor	Axial plunger type
	Slewing motor	Axial plunger type
Control valve		Double acting with integral check and relief valves (With Hydraulic compensated flow control valve)
Cylinder		Double acting type
Oil reservoir capacity		150L
●Safety devices		
		ACS (Automatic Crane System with Voice alarm), Slewing automatic stop system, Working range limit mode, Outrigger status detector, Boom derricking / telescoping holding valve, Jib derricking holding valve, Overhoist prevention device, Winch holding valve, Automatic winch brake, Winch drum roller, Hydraulic safety valves, Outrigger lock pins, Slewing warning lamp, Hydraulic oil temperature warning device
●Standard equipment		
		Air conditioner, Working light (on boom, table and cab), Winch drum turning indication device, Hook for 13 ton, Hook for 1.8 ton
●Operator's cab		
		Adjustable steering wheel, Adjustable seat, Power Window(external closing switch), Front windscreen wiper & washer (2 speed wiper), Roof window wiper & washer, AM/FM Radio, Step lamp, Floor mat, Accessory socket (24V), Emergency set
●Optional equipment		
		ACS outside indicator, PA system, Colorful monitor, Winch view camera, Door visor, Fire extinguisher, Seat suspension

■CARRIER

●Carrier specification		
Maximum traveling speed		49km/h
Grade ability		55 % (computed at G.V.W. = 13.815kg)
Minimum turning radius (center of extreme outer tire)		6.5 m (2 wheel steer)
		3.92 m (4 wheel steer)
●Engine		
Model		Mitsubishi 4M50-TLE3BA
Type		4 cycle, 4 cylinders, water cooled, direct injection turbo-charged diesel engine with intercooling
Piston displacement		4.899L
Max. power		129kW at 2,700min^{-1}
Max. torque		530N·m at 1,600min^{-1}
Diesel Fuel recommended by KATO must be used		
●Equipment and structure		
Drive system		Switches between 2 wheel drive (4×2) and 4 wheel drive (4×4)
Torque converter		Engine mounted 3 elements 1 stage (with lock up clutch)
Transmission		Remote mounted full automatic
Number of speeds		4 forward & 1 reverse speed
Axles	Front	Planetary, drive/steer type
	Rear	Planetary, drive/steer type
Suspension	Front	Taper-leaf spring, Hydraulic locking device with suspension cylinder
	Rear	Taper-leaf spring, Hydraulic locking device with suspension cylinder
Brake system	Service	Air-over hydraulic disk brake on 4 wheels (front and rear independent circuit)
	Parking	Spring applied, electrically air released parking brake mounted on front axle, internal expanding type
	Auxiliary	Exhaust brake, Service brake lock
Steering		Full hydraulic power steering, Completely independent front and rear steering (with automatic rear wheel steering lock system)
Tire size	Front	275 / 80 R22.5 151 / 148J
	Rear	275 / 80 R22.5 151 / 148J
Fuel tank capacity		250 L
Batteries		(12V-100Ah) ×2
●Safety devices		
		Emergency steering device, Rear wheel steering lock system (automatic), Brake fluid leak warning device, Service brake lock, Suspension lock, Engine overspeed alarm, Electrically retractable side view mirrors, Radiator coolant level warning device
●Standard equipment		
		Aluminum outrigger plate, Discharge head lamp
●Optional equipment		
		Wheel stopper, Way side lamp, Side marker lamp, Rear view camera, Left front view camera

■GENERAL Dimensions

Overall length		7,440mm
Overall width		1,995mm
Overall height		2,845mm
Wheel base		2,750mm
Treads	Front	1,680mm
	Rear	1,680mm
Passenger capacity		One person
Gross vehicle weight	Gross weight	approx. 13,815kg
	Front axle	approx. 6,860kg
	Rear axle	approx. 6,955kg

- Stow the hooks in place before traveling.
- Before you use this machine, read the precautions in the instruction manual thoroughly to operate it correctly.
- KATO products and specifications are subject to improvements and changes without notice.

7810010100

■RATED LIFTING CAPACITY

Based on ISO 4305
Not exceed 75% of static tipping loads

5.3m — 24.0m Boom

Working radius (m)	(4.75m) Outriggers fully extended (4.75m) - 360° full range						(4.3m) Outriggers intermediately extended (4.3m) - over side						(3.7m) Outriggers intermediately extended (3.7m) - over side						(2.7m) Outriggers intermediately extended (2.7m) - over side					
	5.3m Boom	9.04m Boom	12.78m Boom	16.52m Boom	20.26m Boom	24.0m Boom	5.3m Boom	9.04m Boom	12.78m Boom	16.52m Boom	20.26m Boom	24.0m Boom	5.3m Boom	9.04m Boom	12.78m Boom	16.52m Boom	20.26m Boom	24.0m Boom	5.3m Boom	9.04m Boom	12.78m Boom	16.52m Boom	20.26m Boom	24.0m Boom
1.5	13.00	6.00	6.00				13.00	6.00	6.00				12.00	6.00	6.00				12.00	6.00	6.00			
1.7	13.00	6.00	6.00				13.00	6.00	6.00				12.00	6.00	6.00				12.00	6.00	6.00			
2.0	12.00	6.00	6.00	5.00			12.00	6.00	6.00	5.00			12.00	6.00	6.00	5.00			12.00	6.00	6.00	5.00		
2.5	10.00	6.00	6.00	5.00			10.00	6.00	6.00	5.00			10.00	6.00	6.00	5.00			8.50	6.00	6.00	5.00		
3.0	8.20	6.00	6.00	5.00	4.70		8.20	6.00	6.00	5.00	4.70		8.20	6.00	6.00	5.00	4.70		6.00	6.00	6.00	5.00	4.70	
3.5	7.00	6.00	6.00	5.00	4.70	3.20	7.00	6.00	6.00	5.00	4.70	3.20	7.00	6.00	6.00	5.00	4.70	3.20	4.70	4.70	4.60	4.50	4.40	3.20
4.0	6.10	6.00	6.00	5.00	4.70	3.20	6.10	6.00	6.00	5.00	4.70	3.20	6.10	6.00	6.00	5.00	4.70	3.20	3.70	3.70	3.70	3.70	3.70	3.20
4.5		5.50	5.40	5.00	4.50	3.20		5.50	5.40	5.00	4.50	3.20		5.10	5.10	5.00	4.50	3.20		3.00	3.00	3.10	3.10	3.00
5.0		5.00	4.90	4.60	4.05	3.20		5.00	4.90	4.60	4.05	3.20		4.40	4.40	4.50	4.05	3.20		2.40	2.40	2.60	2.70	2.70
5.5		4.50	4.40	4.20	3.70	3.20		4.50	4.40	4.20	3.70	3.20		3.80	3.70	3.90	3.70	3.20		2.00	2.00	2.20	2.30	2.30
6.0		4.10	4.00	3.80	3.40	3.00		4.10	4.00	3.80	3.40	3.00		3.20	3.20	3.40	3.40	3.00		1.70	1.70	1.85	2.00	2.05
6.5		3.70	3.65	3.50	3.15	2.80		3.65	3.60	3.50	3.15	2.80		2.80	2.75	2.95	3.05	2.75		1.40	1.40	1.60	1.70	1.75
7.0		3.35	3.30	3.20	2.90	2.60		3.20	3.15	3.20	2.90	2.60		2.40	2.35	2.55	2.70	2.50		1.20	1.20	1.40	1.50	1.55
8.0		2.70 (7.7m)	2.90	2.70	2.50	2.25		2.65 (7.7m)	2.45	2.60	2.50	2.25		1.95 (7.7m)	1.80	2.00	2.10	2.15		0.90 (7.7m)	0.85	1.05	1.15	1.20
9.0			2.25	2.30	2.20	1.95			1.90	2.10	2.20	1.95			1.40	1.60	1.70	1.75			0.60	0.80	0.90	0.95
10.0			1.80	2.05	1.95	1.75			1.50	1.70	1.85	1.75			1.05	1.25	1.35	1.45			0.35	0.55	0.65	0.75
11.0			1.45	1.70	1.75	1.55			1.20	1.40	1.55	1.55			0.80	1.00	1.10	1.20				0.40	0.50	0.60
12.0			1.35 (11.4m)	1.40	1.50	1.40			1.10 (11.4m)	1.15	1.30	1.35			0.70 (11.4m)	0.80	0.90	1.00				0.25	0.35	0.45
13.0				1.15	1.30	1.25				0.95	1.10	1.15				0.65	0.75	0.85					0.20	0.30
14.0				0.95	1.10	1.15				0.80	0.90	1.00				0.50	0.60	0.70						0.20
15.0				0.80	0.90	1.00				0.65	0.75	0.85				0.40	0.50	0.55						
16.0					0.79	0.85					0.65	0.70					0.40	0.45						
17.0					0.68	0.74					0.55	0.60					0.30	0.35						
18.0					0.58	0.64					0.45	0.50						0.30						
19.0					0.51 (18.8m)	0.55					0.35 (18.8m)	0.40												
20.0						0.47						0.35												
21.0						0.41						0.30												
22.0						0.35						0.25												
22.5						0.32																		
Critical boom angle	—	—	—	—	—	—	—	—	—	—	—	—	—	—	—	—	23°	36°	—	—	19°	32°	44°	50°
Standard hook	For 13 ton						For 13 ton						For 13 ton						For 13 ton					
Hook mass	90kg						90kg						90kg						90kg					
Parts of line	8	4	4	4	4	4	8	4	4	4	4	4	8	4	4	4	4	4	8	4	4	4	4	4

(Unit: Metric ton)

5.3m — 24.0m Boom

Working radius (m)	(1.64m) Outriggers completely retracted (1.64m) - over side					
	5.3m Boom	9.04m Boom	12.78m Boom	16.52m Boom	20.26m Boom	24.0m Boom
1.5	8.00	6.00	6.00			
1.7	7.00	6.00	6.00			
2.0	5.60	5.40	5.00	4.70		
2.5	3.80	3.80	3.60	3.50		
3.0	2.80	2.80	2.70	2.70	2.60	
3.5	2.10	2.10	2.00	2.10	2.10	2.10
4.0	1.60	1.60	1.55	1.70	1.70	1.75
4.5		1.25	1.20	1.40	1.40	1.45
5.0		0.95	0.95	1.10	1.20	1.25
5.5		0.75	0.75	0.90	1.00	1.05
6.0		0.60	0.55	0.75	0.80	0.90
6.5		0.40	0.35	0.60	0.65	0.75
7.0		0.25		0.45	0.55	0.60
Critical boom angle	—	20°	54°	61°	66°	70°
Standard hook	For 13 ton					
Hook mass	90kg					
Parts of line	8	4	4	4	4	4

(Unit: Metric ton)

■When outriggers are not used

Working radius (m)	Stationary on rubber						Pick & carry (less than 2km/h)						Working radius (m)
	5.3m Boom		9.04m Boom		12.78m Boom		5.3m Boom		9.04m Boom		12.78m Boom		
	Over front	360° full range	Over front	360° full range	Over front	360° full range	Over front	360° full range	Over front	360° full range	Over front	360° full range	
1.5	3.60	2.80	3.60	2.80	3.60	2.80	3.20	2.00	3.20	2.00	3.20	2.00	1.5
2.0	3.40	2.80	3.40	2.80	3.40	2.80	3.00	2.00	3.00	2.00	3.00	2.00	2.0
2.5	3.10	2.15	3.10	2.10	3.10	2.05	2.80	1.55	2.75	1.50	2.65	1.45	2.5
3.0	2.65	1.60	2.60	1.55	2.55	1.50	2.40	1.10	2.30	1.05	2.20	1.00	3.0
3.5	2.30	1.25	2.20	1.20	2.10	1.10	2.00	0.85	1.90	0.75	1.80	0.65	3.5
4.0	2.00	0.90	1.90	0.80	1.70	0.70	1.70	0.60	1.65	0.50	1.50	0.40	4.0
4.5			1.60	0.50	1.40	0.40			1.40	0.30	1.25		4.5
5.0			1.30		1.10				1.15		1.00		5.0
5.5			1.10		0.95				0.95		0.85		5.5
6.0			0.90		0.80				0.80		0.70		6.0
7.0			0.50		0.50				0.45		0.45		7.0
Critical boom angle	—	—	26°	54°	52°	66°	—	—	26°	54°	52°	68°	Critical boom angle
Standard hook	For 13 ton						For 13 ton						Standard hook
Hook mass	90kg						90kg						Hook mass
Parts of line	4						4						Parts of line

(Unit: Metric ton)

781-75101000
781-75102000

Based on ISO 4305
Not exceed 75% of static tipping loads

24.0m Boom＋3.6m Jib

(4.75m)

Outriggers fully extended (4.75m) - 360° full range

Boom angle (°)	Offset 5°		Offset 25°		Offset 45°		Offset 60°	
	Working radius (m)	Load (ton)	Working radius (m)	Load (ton)	Working radius (m)	Load (ton)	Working radius (m)	Load (ton)
82	4.4	1.60	5.8	1.50	6.5	1.00	6.8	0.65
80	5.2	1.60	6.4	1.50	7.2	1.00	7.4	0.65
75	7.8	1.60	8.7	1.17	9.5	0.93	9.6	0.65
70	10.1	1.25	11.1	0.98	11.6	0.85	11.8	0.65
65	12.3	1.05	13.1	0.88	13.6	0.77	13.8	0.65
60	14.3	0.90	15.1	0.76	15.6	0.70	15.6	0.65
55	16.3	0.72	17.0	0.64	17.4	0.64		
50	18.1	0.57	18.7	0.51	18.9	0.53		
45	19.7	0.42	20.4	0.40	20.3	0.40		
40	21.1	0.30	21.6	0.29				
35	22.3	0.22	22.7	0.20				
Critical boom angle	34°		34°		44°		59°	
Standard hook	For 1.8 ton							
Hook mass	25kg							
Parts of line	1							

(4.3m)

Outriggers intermediately extended (4.3m) over side

Boom angle (°)	Offset 5°		Offset 25°		Offset 45°		Offset 60°	
	Working radius (m)	Load (ton)	Working radius (m)	Load (ton)	Working radius (m)	Load (ton)	Working radius (m)	Load (ton)
82	4.4	1.60	5.8	1.50	6.5	1.00	6.8	0.65
80	5.2	1.60	6.4	1.50	7.2	1.00	7.4	0.65
75	7.8	1.60	8.7	1.17	9.5	0.93	9.6	0.65
70	10.1	1.25	11.1	0.98	11.6	0.85	11.8	0.65
65	12.3	1.05	13.1	0.88	13.6	0.77	13.8	0.65
60	14.3	0.87	15.1	0.76	15.6	0.70	15.6	0.65
55	16.2	0.60	16.9	0.55	17.3	0.53		
50	18.0	0.43	18.6	0.41	18.8	0.40		
45	19.6	0.30	20.2	0.27	20.3	0.27		
40	21.0	0.19	21.5	0.18				
Critical boom angle	39°		39°		44°		59°	
Standard hook	For 1.8 ton							
Hook mass	25kg							
Parts of line	1							

(3.7m)

Outriggers intermediately extended (3.7m) over side

Boom angle (°)	Offset 5°		Offset 25°		Offset 45°		Offset 60°	
	Working radius (m)	Load (ton)	Working radius (m)	Load (ton)	Working radius (m)	Load (ton)	Working radius (m)	Load (ton)
82	4.4	1.60	5.8	1.50	6.5	1.00	6.8	0.65
80	5.2	1.60	6.4	1.50	7.2	1.00	7.4	0.65
75	7.8	1.60	8.7	1.17	9.5	0.93	9.6	0.65
70	10.1	1.25	11.1	0.98	11.6	0.85	11.8	0.65
65	12.2	0.90	13.1	0.77	13.6	0.77	13.8	0.65
60	14.2	0.59	15.0	0.54	15.5	0.54	15.5	0.54
55	16.0	0.37	16.8	0.33	17.2	0.33		
50	17.8	0.20	18.5	0.18	18.7	0.18		
Critical boom angle	49°		49°		49°		59°	
Standard hook	For 1.8 ton							
Hook mass	25kg							
Parts of line	1							

24.0m Boom＋3.6m Jib

(2.7m)

Outriggers intermediately extended (2.7m) over side

Boom angle (°)	Offset 5°		Offset 25°		Offset 45°		Offset 60°	
	Working radius (m)	Load (ton)	Working radius (m)	Load (ton)	Working radius (m)	Load (ton)	Working radius (m)	Load (ton)
82	4.4	1.60	5.8	1.50	6.5	1.00	6.8	0.65
80	5.2	1.60	6.4	1.50	7.2	1.00	7.4	0.65
75	7.8	1.20	8.7	1.05	9.5	0.93	9.6	0.65
70	10.0	0.72	10.9	0.65	11.5	0.62	11.7	0.56
65	11.9	0.41	12.9	0.35	13.4	0.34	13.6	0.33
Critical boom angle	64°		64°		64°		64°	
Standard hook	For 1.8 ton							
Hook mass	25kg							
Parts of line	1							

24.0m Boom＋5.5m Jib

(4.75m)

Outriggers fully extended (4.75m) - 360° full range

Boom angle (°)	Offset 5°		Offset 25°		Offset 45°		Offset 60°	
	Working radius (m)	Load (ton)	Working radius (m)	Load (ton)	Working radius (m)	Load (ton)	Working radius (m)	Load (ton)
82	4.8	1.00	6.9	1.00	8.2	0.65	8.6	0.40
80	5.6	1.00	7.6	1.00	8.9	0.65	9.2	0.40
75	8.4	1.00	10.1	0.85	11.2	0.63	11.5	0.40
70	11.1	1.00	12.4	0.72	13.4	0.58	13.6	0.40
65	13.4	0.81	14.7	0.61	15.6	0.52	15.6	0.40
60	15.6	0.69	16.8	0.55	17.5	0.48	17.4	0.40
55	17.7	0.58	18.8	0.49	19.3	0.45		
50	19.6	0.49	20.5	0.44	20.8	0.41		
45	21.2	0.38	22.0	0.36	22.3	0.36		
40	22.9	0.26	23.4	0.26				
Critical boom angle	39°		39°		44°		59°	
Standard hook	For 1.8 ton							
Hook mass	25kg							
Parts of line	1							

(4.3m)

Outriggers intermediately extended (4.3m) over side

Boom angle (°)	Offset 5°		Offset 25°		Offset 45°		Offset 60°	
	Working radius (m)	Load (ton)	Working radius (m)	Load (ton)	Working radius (m)	Load (ton)	Working radius (m)	Load (ton)
82	4.8	1.00	6.9	1.00	8.2	0.65	8.6	0.40
80	5.6	1.00	7.6	1.00	8.9	0.65	9.2	0.40
75	8.4	1.00	10.1	0.85	11.2	0.63	11.5	0.40
70	11.1	1.00	12.4	0.72	13.4	0.58	13.6	0.40
65	13.4	0.81	14.7	0.61	15.6	0.52	15.6	0.40
60	15.5	0.69	16.8	0.55	17.5	0.48	17.4	0.40
55	17.6	0.54	18.7	0.49	19.2	0.45		
50	19.5	0.38	20.4	0.36	20.7	0.35		
45	21.0	0.27	21.8	0.25	22.1	0.25		
Critical boom angle	44°		44°		44°		59°	
Standard hook	For 1.8 ton							
Hook mass	25kg							
Parts of line	1							

24.0m Boom＋5.5m Jib

(3.7m)

Outriggers intermediately extended (3.7m) over side

Boom angle (°)	Offset 5°		Offset 25°		Offset 45°		Offset 60°	
	Working radius (m)	Load (ton)	Working radius (m)	Load (ton)	Working radius (m)	Load (ton)	Working radius (m)	Load (ton)
82	4.8	1.00	6.9	1.00	8.2	0.65	8.6	0.40
80	5.6	1.00	7.6	1.00	8.9	0.65	9.2	0.40
75	8.4	1.00	10.1	0.85	11.2	0.63	11.5	0.40
70	11.1	1.00	12.4	0.72	13.4	0.58	13.6	0.40
65	13.4	0.75	14.7	0.61	15.6	0.52	15.6	0.40
60	15.4	0.52	16.7	0.45	17.5	0.42	17.4	0.40
55	17.4	0.31	18.6	0.28	19.1	0.28		
52	18.5	0.22	19.5	0.21	20.0	0.20		
Critical boom angle	51°		51°		51°		59°	
Standard hook	For 1.8 ton							
Hook mass	25kg							
Parts of line	1							

(2.7m)

Outriggers intermediately extended (2.7m) over side

Boom angle (°)	Offset 5°		Offset 25°		Offset 45°		Offset 60°	
	Working radius (m)	Load (ton)	Working radius (m)	Load (ton)	Working radius (m)	Load (ton)	Working radius (m)	Load (ton)
82	4.8	1.00	6.9	1.00	8.2	0.65	8.6	0.40
80	5.6	1.00	7.6	1.00	8.9	0.65	9.2	0.40
75	8.4	1.00	10.1	0.85	11.2	0.63	11.5	0.40
70	10.8	0.66	12.3	0.55	13.3	0.48	13.6	0.40
65	12.9	0.36	14.4	0.30	15.3	0.26		
Critical boom angle	64°		64°		64°		69°	
Standard hook	For 1.8 ton							
Hook mass	25kg							
Parts of line	1							

■Notes for the lifting capacity chart

●When the outriggers are used

1. The lifting capacity chart indicates the maximum load which can be lifted by this crane provided it is level and standing on firm level ground. The values in the chart include the mass of the main hook and slings for boom operation, and auxiliary hook and slings for jib operation.
   [13 ton hook (mass: 90kg), 1.8 ton hook (mass: 25kg)]
   Within the chart the figures in the area bordered with a thick line are based on structural limitations while other figures are determined by stability limitations.
2. The working radii are the actual values allowing for boom and jib deflection. Therefore you must always operate the crane on the basis of working radius.
3. The jib working radius is based on the jib mounted on the end of the 24.0 m boom. When operating at other boom lengths, use the boom angle alone as the criterion.
4. Do not operate the jib when the outriggers are completely retracted.
5. The lifting capacities for the over sides vary with the outriggers extension width. Therefore for each outriggers extension condition you should work according the lifting capacity chart. Use the lifting capacity chart of outriggers full extension for both front and rear areas lifting capacities.

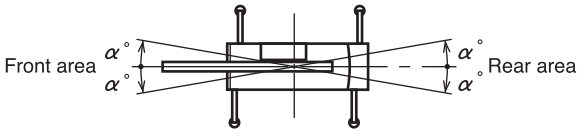

Outrigger extension status	Intermediate extension (4.3m)	Intermediate extension (3.7m)	Intermediate extension (2.7m)	Complete retraction
Area α°	25	25	15	3

6. The lifting capacity of the rooster sheave is the lifting capacity of the boom minus the mass of all attached hook, slings etc. to the boom, with an upper limit of 1,800 kg.
   [The hook for use with the rooster sheave is the 1.8 ton hook (mass: 25kg) with one part of line.]
7. If the boom length, boom angle, working radius and/or jib angle exceeds the rated value, use the lifting capacity for the rated value or for the next one, whichever gives the smaller lifting capacity.
8. If you are working with the boom while the jib is rigged, subtract 600 kg plus the mass of all attached hook, slings, etc. to the boom from the each lifting capacity of the boom, with an upper limit of 5 ton.
   Do not use the rooster sheave in this situation. And do not operate the boom while the jib is rigged, when the outriggers are completely retracted.
9. In whatever working conditions the corresponding boom critical angle is shown in the chart. The crane can tip over if the boom is lowered below the critical angle even if unloaded.
   Therefore, never lower the boom below these angles.
10. The standard parts of line for each boom length are as indicated in the chart. If you work with a non-standard number of parts of line, do not exceed 15.7 kN (1.6 tf) per wire rope respectively.
11. High-speed lowering operation should only be performed to allow descent of the hook alone. Avoid sudden lever operation.
12. Crane operation is permissible up to a wind speed of 10 m/s. Even in relatively light wind conditions, extra care should be taken when handling loads presenting large wind catching areas.
13. If you work with a load in excess of the lifting capacity or use incorrect working procedures, you are risking damaging the crane or tipping it over. In such cases, the crane will not be guaranteed.

● When the outriggers are not used

1. The lifting capacity chart indicates the maximum load the crane can lift when its body is level on firm level ground with all tires inflated to the rated pressure and the suspension cylinder completely retracted. The values in the chart include the mass of the main hook and slings.
   Within the chart the figures in the area bordered with a thick line are based on structural limitations while other figures are determined by stability limitations.
   [Rated tire pressure: 875 kPa (8.75 kgf/cm^2)]
2. The working radii are the actual values allowing for boom deflection. Therefore you must always operate the crane on the basis of the working radius.
3. The lifting capacity differs between the front area capacity and the full range capacity. When slewing from the front to the side, take care that the crane could not be over loaded.

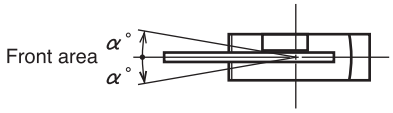

Crane operation	Stationary crane-on-rubber operation	Pick and carry operation
Area α°	1	1

4. The lifting capacity of the rooster sheave is the lifting capacity of the boom minus the mass of all attached hook, slings etc. to the boom, with an upper limit of 1,800 kg.
   [The hook for use with the rooster sheave is the 1.8 ton hook (mass: 25kg) with one part of line.]
5. Do not perform boom operation with a boom length of more than 12.78 m or jib operation.
6. For stationary crane-on-rubber operation, the parking brake and service brake lock device must be engaged.
7. For pick and carry operation, the shift lever must be set to speed 1.
8. For pick and carry operation, lower the load to just above the ground and keep your speed strictly below 2 km/h to avoid swinging the load.
   Take particular care to avoid sharp turns, sudden starts and stops.
9. Never operate the crane during pick and carry operation. The slewing brake must be applied.
10. If the boom length, boom angle and / or working radius exceeds the rated value, use the lifting capacity for the rated value or for the next one, whichever gives the smaller lifting capacity.
11. In whatever working conditions the corresponding boom critical angle is shown in the chart. The crane can tip over if the boom is lowered below the critical angle even if unloaded. Therefore, never lower the boom below these angles.
12. The standard parts of line for each boom length are as indicated in the chart. If you work with a non-standard number of parts of line, do not exceed 15.7 kN (1.6 tf) per wire rope respectively.
13. High-speed lowering operation should only be performed to allow descent of the hook alone. Avoid sudden lever operation.
14. Crane operation is permissible up to a wind speed of 10 m/s. Even in relatively light wind conditions, extra care should be taken when handling loads presenting large wind catching areas.
15. If you work with a load in excess of the lifting capacity or use incorrect working procedures, you are risking damaging the crane or tipping it over. In such cases, the crane will not be guaranteed.

■WORKING RANGE

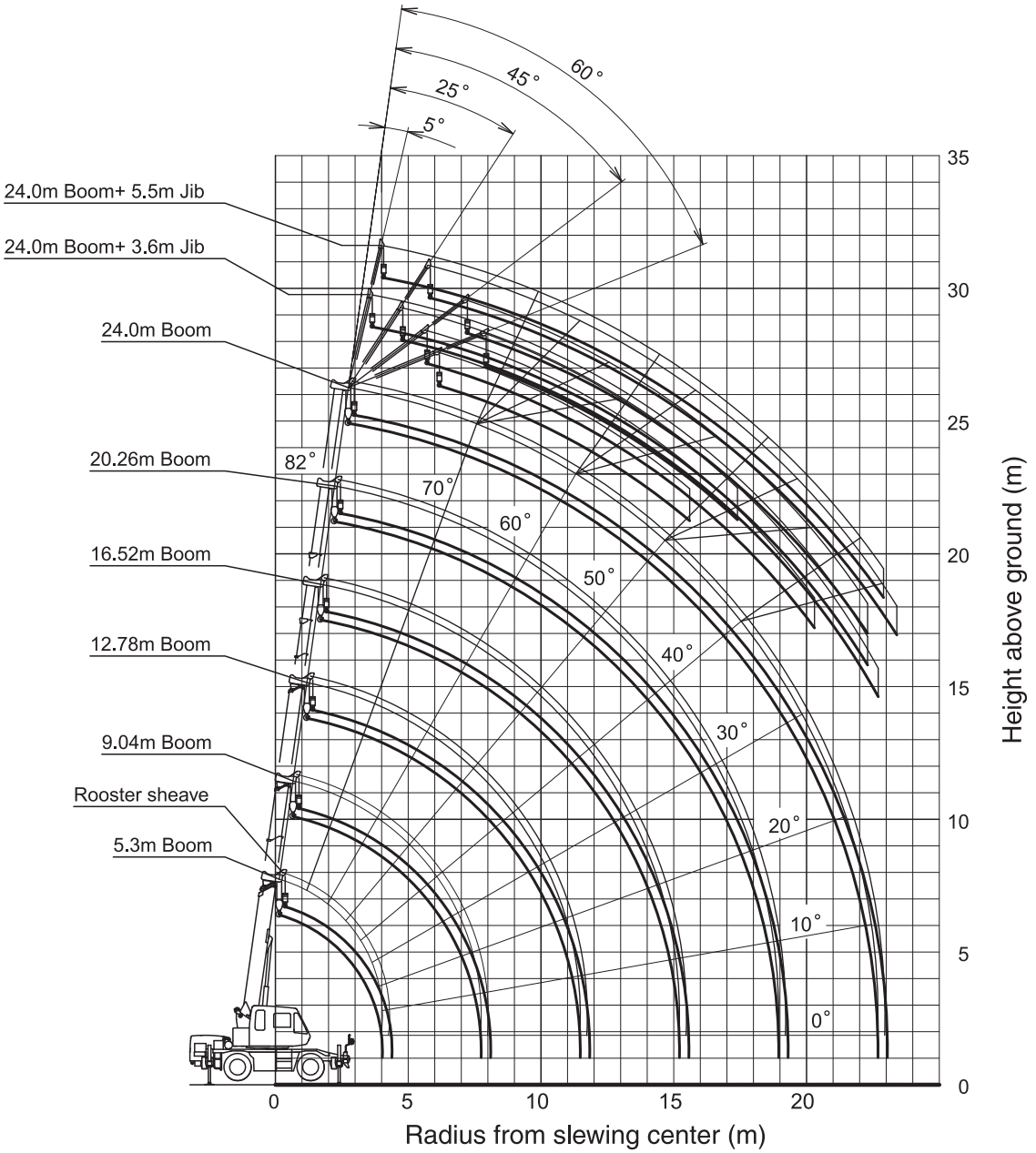

Notes:

1. This diagram does not include deflection of Boom and Jib.
2. The outriggers are fully extended.

■Minimum path width

●Right turn in two-wheel steering mode

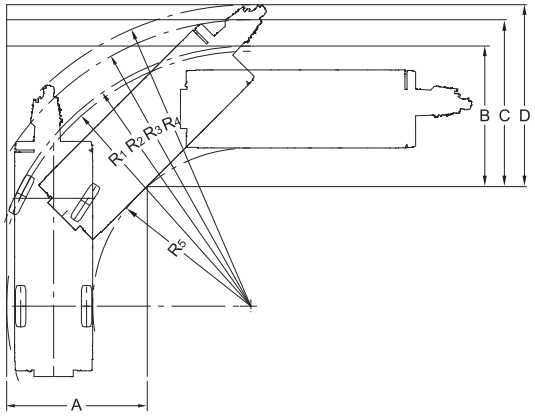

- R_1=6.50m (Minimum turning radius)
- R_2=6.64m (Turning radius of extremely outer tire)
- R_3=7.31m (Chassis turning radius)
- R_4=7.69m (Boom end turning radius)
- R_5=4.03m (Turning radius extremely chassis inner)
- A=3.59m (Width of entrance)
- B=3.59m (Width of wheel exit)
- C=4.26m (Width of chassis exit)
- D=4.65m (Width of exit at end of boom)

●Right turn in 4-wheel steering mode

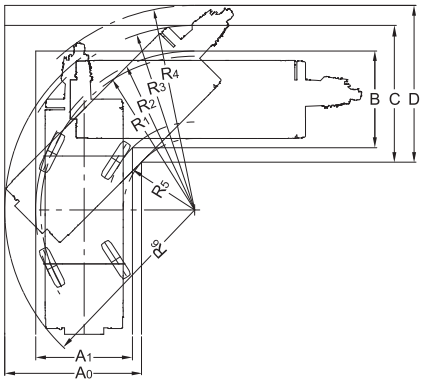

- R_1=3.92m (Minimum turning radius)
- R_2=4.06m (Turning radius of extremely outer tire)
- R_3=4.71m (Chassis turning radius)
- R_4=5.22m (Boom end turning radius)
- R_5=1.82m (Turning radius extremely chassis inner)
- R_6=4.85m (Turning radius at the rear end of the chassis)
- A_0=3.49m (Width of chassis entrance)
- A_1=2.47m (Width of wheel entrance)
- B =2.47m (Width of wheel exit)
- C =3.49m (Width of chassis exit)
- D =4.00m (Width of exit at end of boom)

Note: The above values are based on calculations.

■Overall view

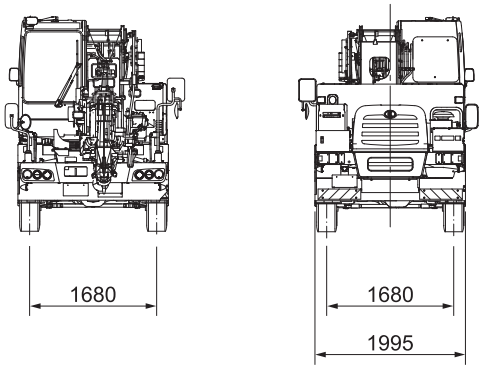

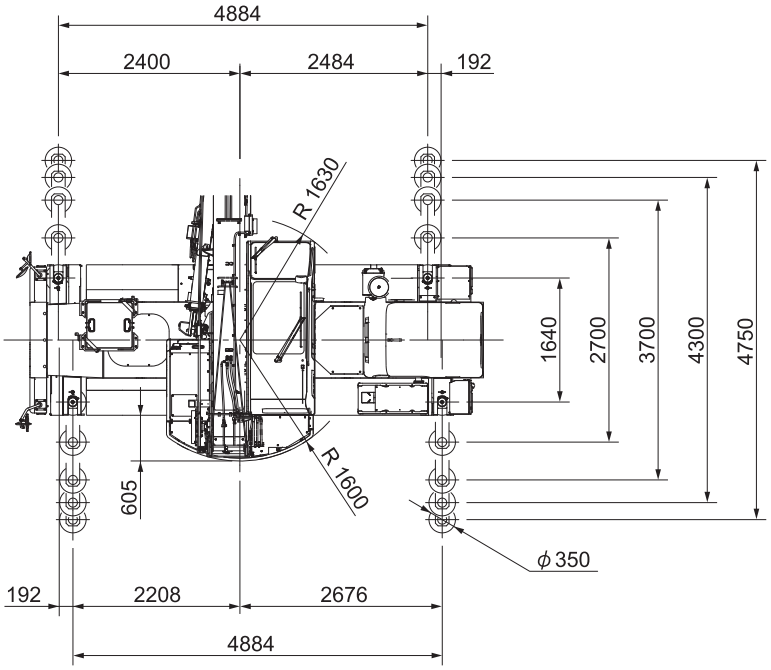

Reduced scale: 1/100 Unit (mm)

■Overall view

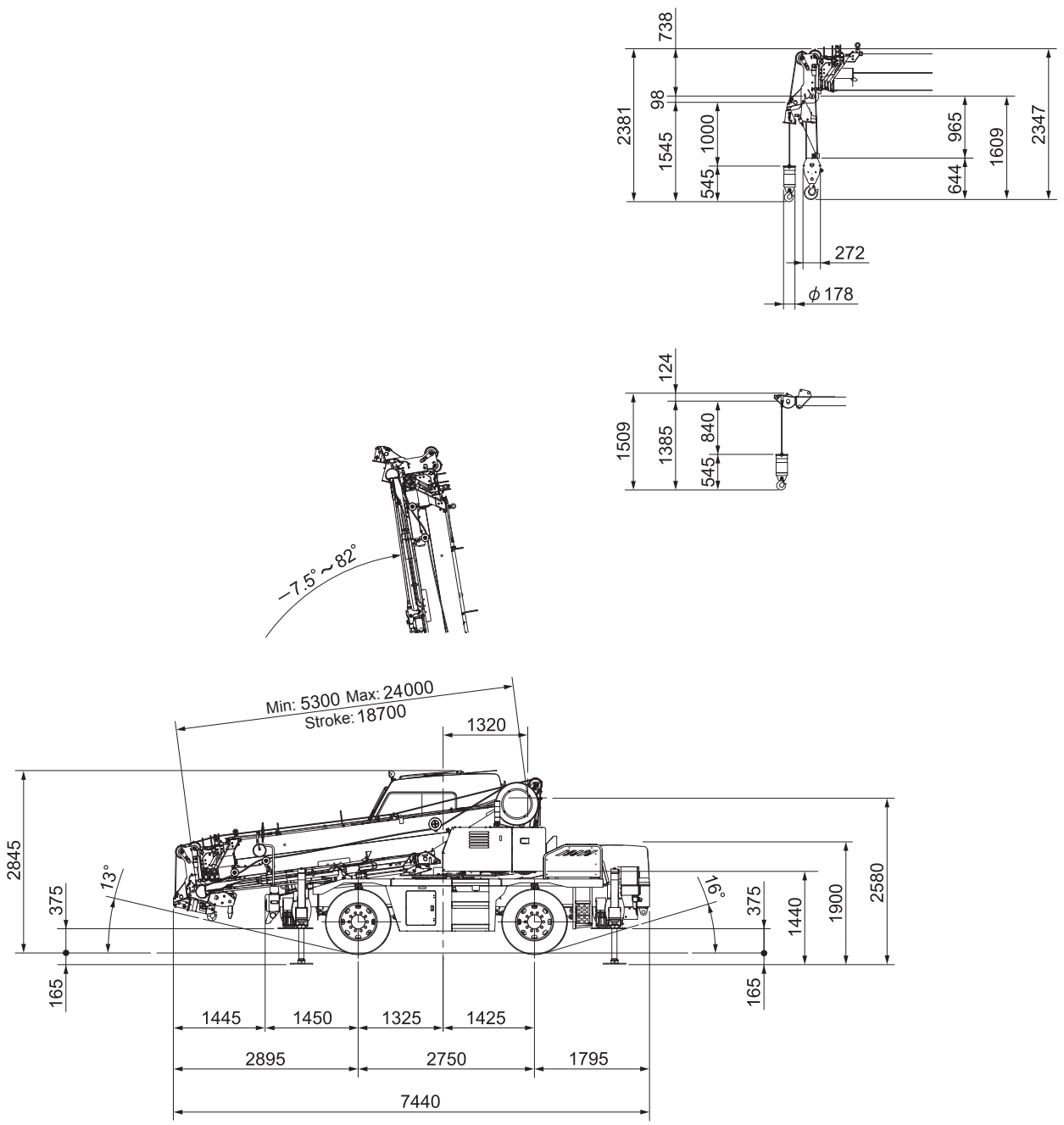

Ramp break over angle: 31˚
When the suspension is locked, the height shall be the overall height: - 30 mm.
(Suspension cylinder completely retracted)

Reduced scale: 1/100 Unit (mm)

* KATO products and specifications are subject to improvements and changes without notice.

Address inquiries to:

KATO
KATO WORKS CO.,LTD.
9-37, Higashi-ohi 1-chome,Shinagawa-ku, Tokyo, 140-0011, Japan
Tel. : Head Office Tokyo (03) 3458-1111
Overseas Marketing Department. Tokyo (03) 3458-1115
Fax. : Tokyo (03) 3458-1152
URL http://www.kato-works.co.jp

C04211
2.2016-1000 (TI) 1

ISO 9001 BUREAU VERITAS Certification

We acquired the "ISO 9001" certification which is an international standard for quality assurance.